Cats Eye

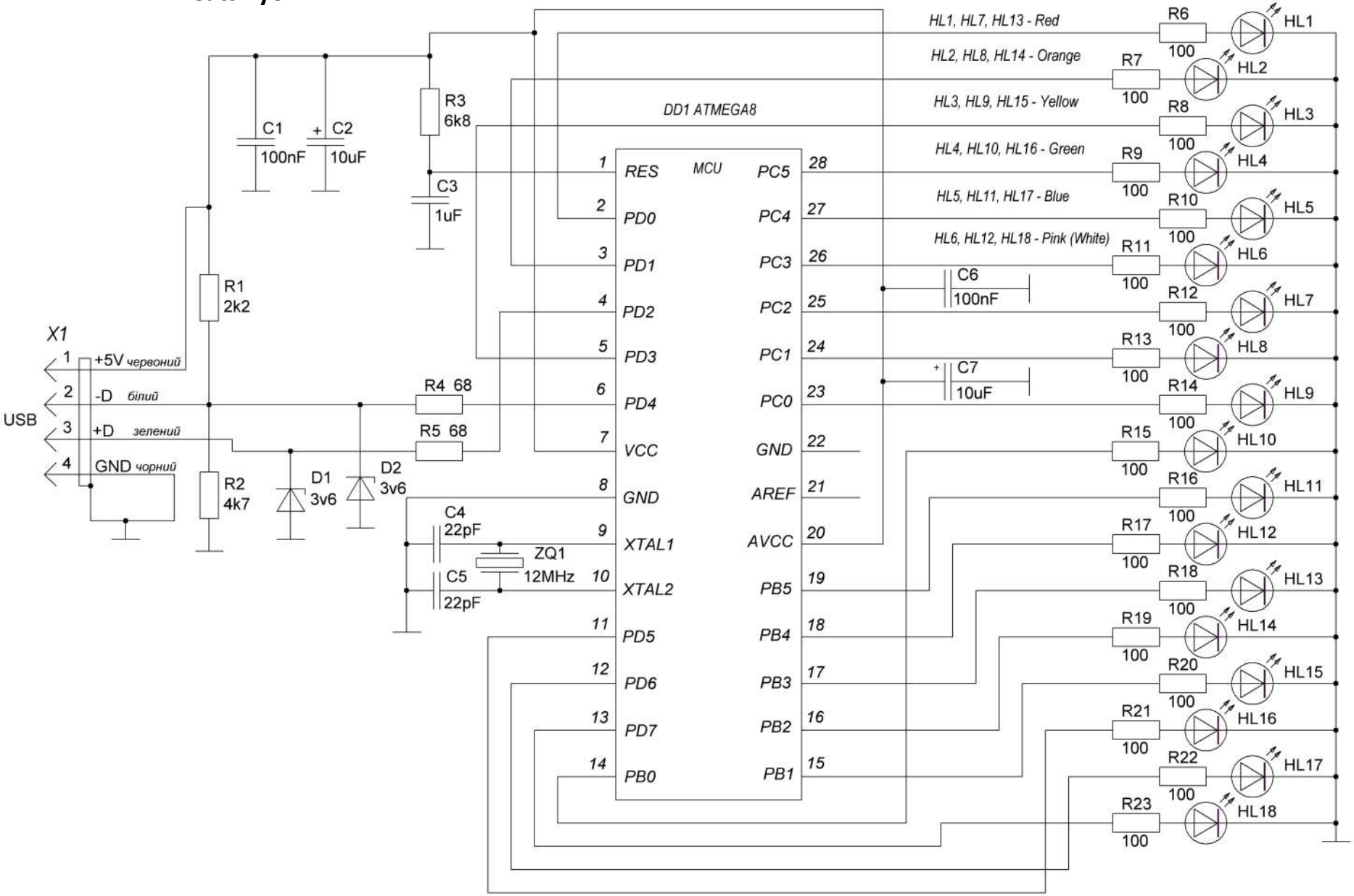
DD1 ATMEGA8
MCU
RES
PD0
PD1
PD2
PD3
PD4
VCC
GND
GND
XTAL1
XTAL2
PD5
PD6
PD7
PB0
PC5
PC4
PC3
PC2
PC1
PC0
GND
AREF
AVCC
PB5
PB4
PB3
PB2
PB1
HL1, HL7, HL13 - Red
HL2, HL8, HL14 - Orange
HL3, HL9, HL15 - Yellow
HL4, HL10, HL16 - Green
HL5, HL11, HL17 - Blue
HL6, HL12, HL18 - Pink (White)
C1 100nF
C2 10uF
C3 1uF
R3 6k8
R1 2k2
R2 4k7
R4 68
R5 68
D1 3v6
D2 3v6
C4 22pF
C5 22pF
ZQ1 12MHz
C6 100nF
C7 10uF
X1
USB
+5V червоний
-D білий
+D зелений
GND чорний
R6 100
R7 100
R8 100
R9 100
R10 100
R11 100
R12 100
R13 100
R14 100
R15 100
R16 100
R17 100
R18 100
R19 100
R20 100
R21 100
R22 100
R23 100
HL1
HL2
HL3
HL4
HL5
HL6
HL7
HL8
HL9
HL10
HL11
HL12
HL13
HL14
HL15
HL16
HL17
HL18

M 2:1

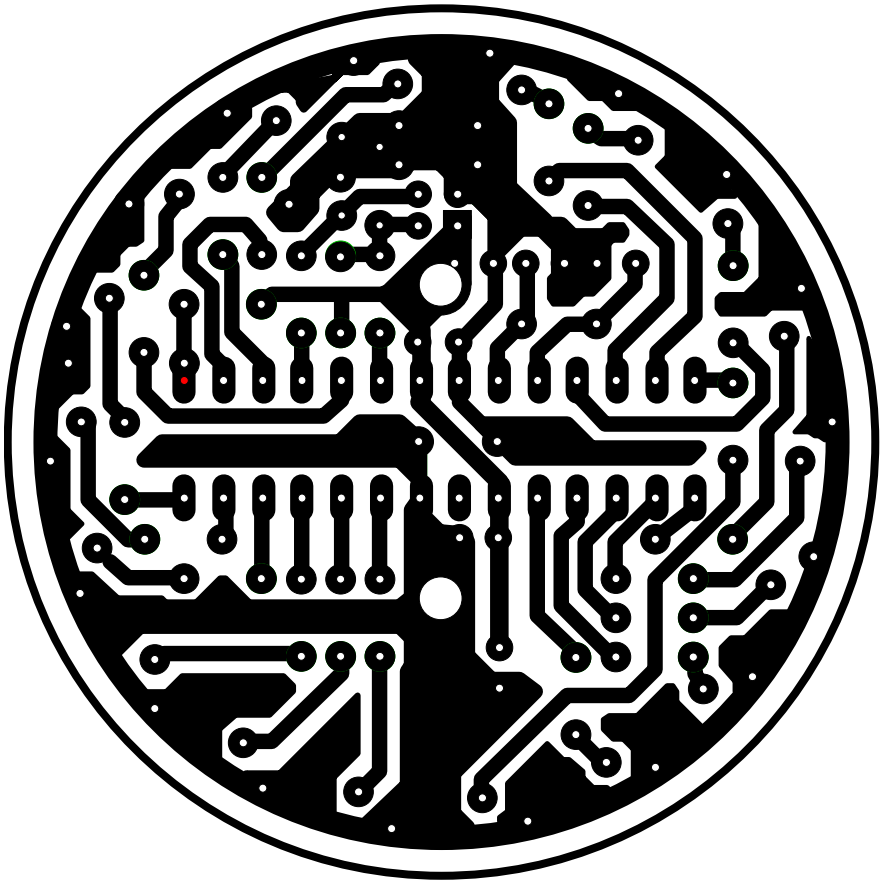

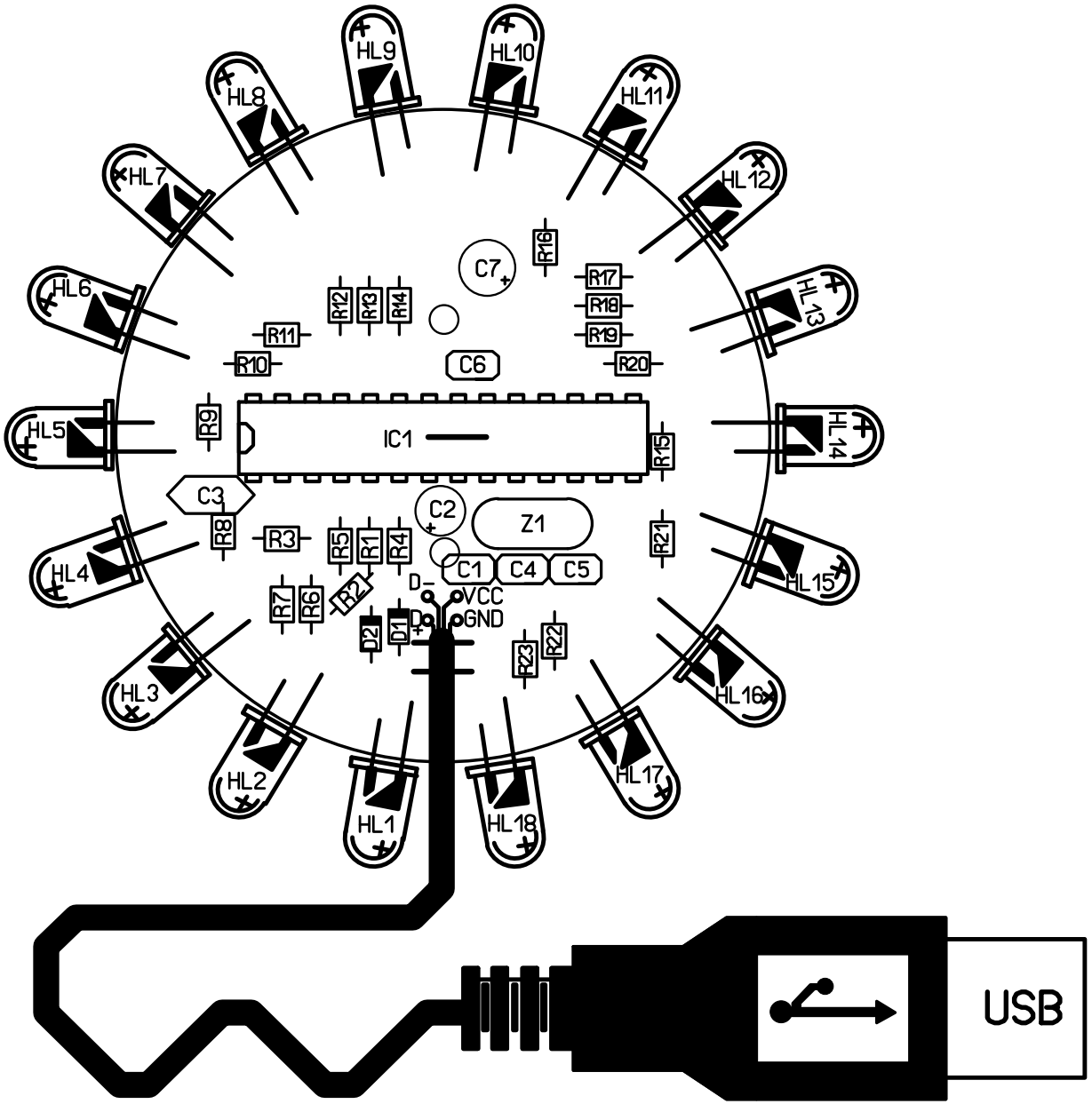

http://radiokot.ru/konkurs/059/

Cats Eye